Lab Report 5

Inverting and Non-Inverting Amplifier Behavior

The behavior of the inverting and the non-inverting operational amplifiers can be distinguished by the difference of their amplitude/phase relationship of the input and output signals. For each input and output signal, the colors are yellow and blue, respectively.

Figure 1: Inverting Operation Amplifier Signals and Measurements

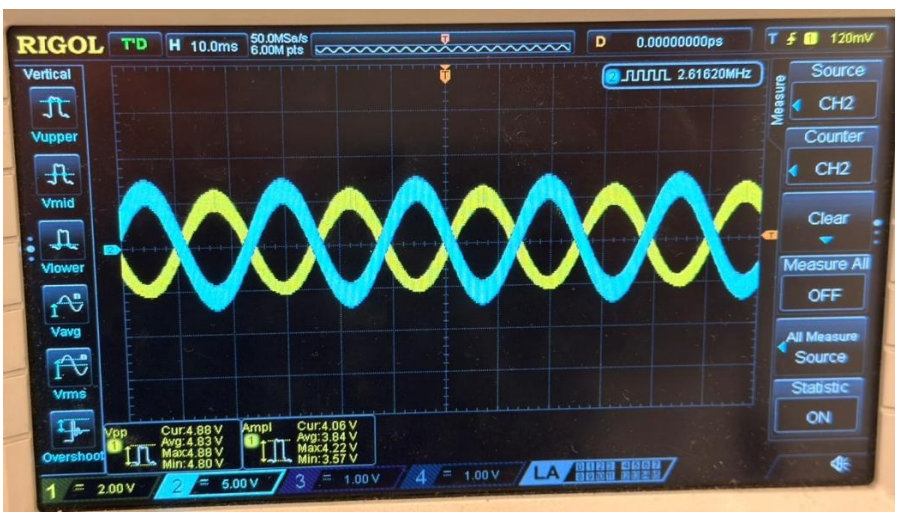

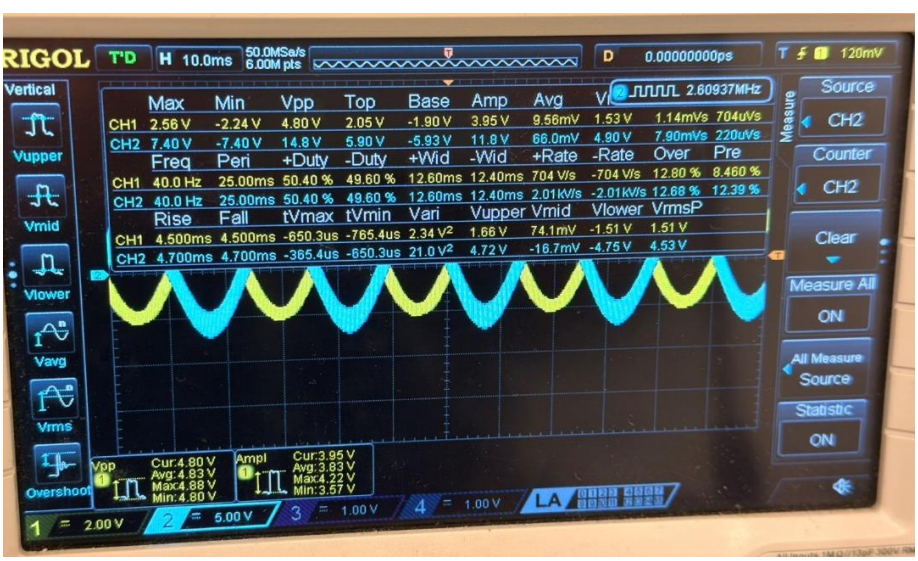

Figure 2: Non-Inverting Operational Amplifier Signals

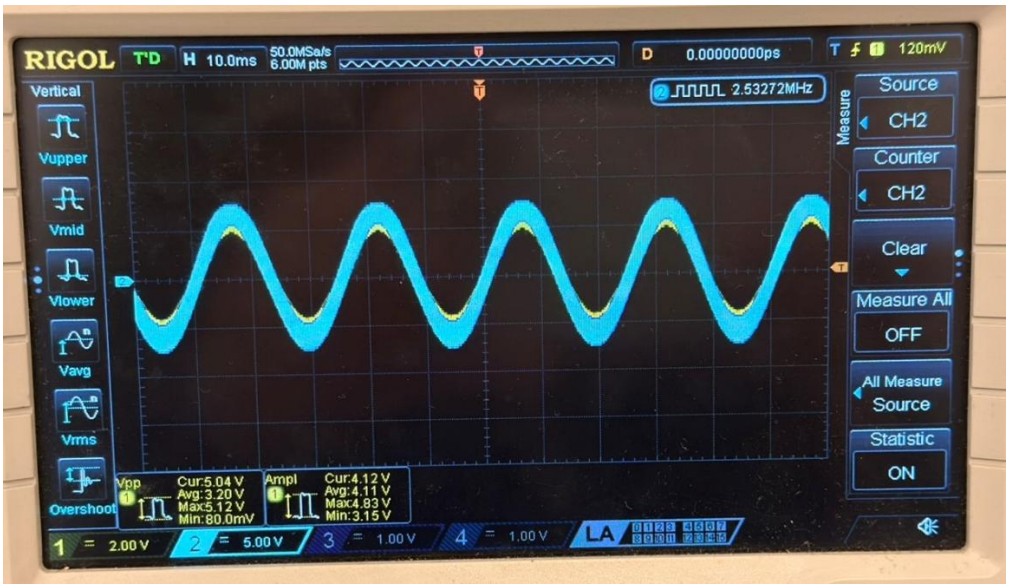

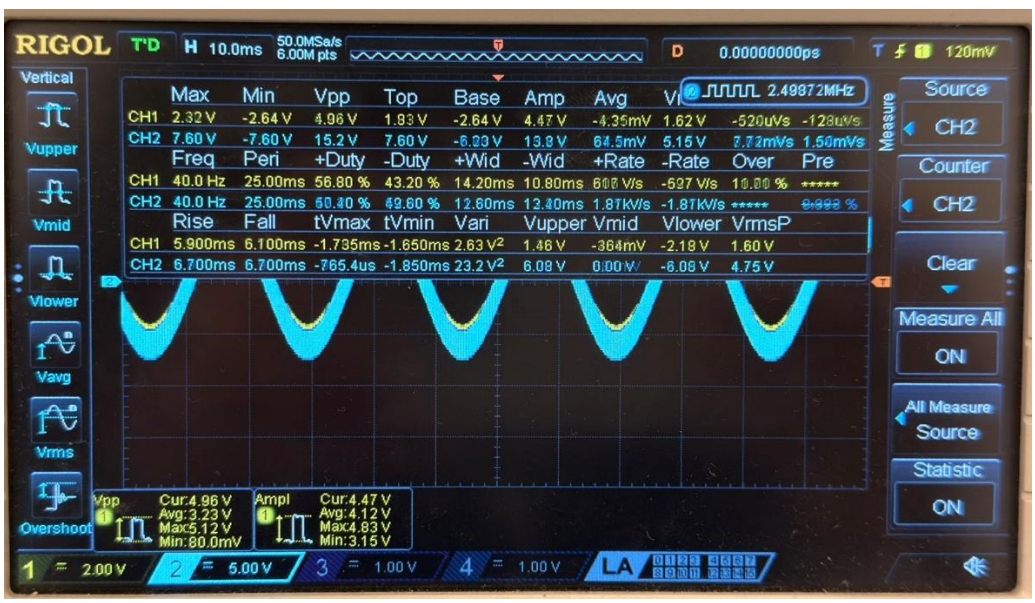

As seen in the photos, the gain for both inverting and non-inverting circuits have around the same magnitude of 3 for the gain. The only difference is that the inverting signal has a signed gain of -3, causing the output signal to shift or flip along the time axis. This is because the input is a sinusoidal signal, and the sine function has the property $-A\sin(\omega t) = \mathrm{A}\sin(\omega t + \pi)$.

The role of negative feedback plays a role in gain control by determining the specific closed-loop voltage gain of the amplifier, making it dependent on external resistor values rather than the op-amp's internal open-loop gain. Stability helps stabilize the amplifier's operation against variations in temperature or manufacturing tolerances. Linear operation ensures the amplifier operates within its linear range, preventing the signal from saturation until it reaches the power supply limits.

Op-amp saturation was observed by increasing the voltage of the signal input. But first, an input signal with $V_{pp} \approx 5\ \mathrm{V}$ was observed for both inverting and non-inverting input signals, while function generator's amplitude was set to 2 V. A likely cause for this is that the signal generator's internal $50\ \Omega$ resistor, and the component tolerances of the resistors and operational amplifier was adding uncertainties to the measured value.

We observed saturation at around $V_{pp} \approx 6.3\ \mathrm{V}$ for the input signal, this is because the gain of 3 outputs a signal with $V_{pp} = 20$, and since $V_{+cc} = 10\ \mathrm{V}$ and $V_{-cc} = -10\ \mathrm{V}$ the op amp will saturate at that input.

Howland Current Pump Circuit

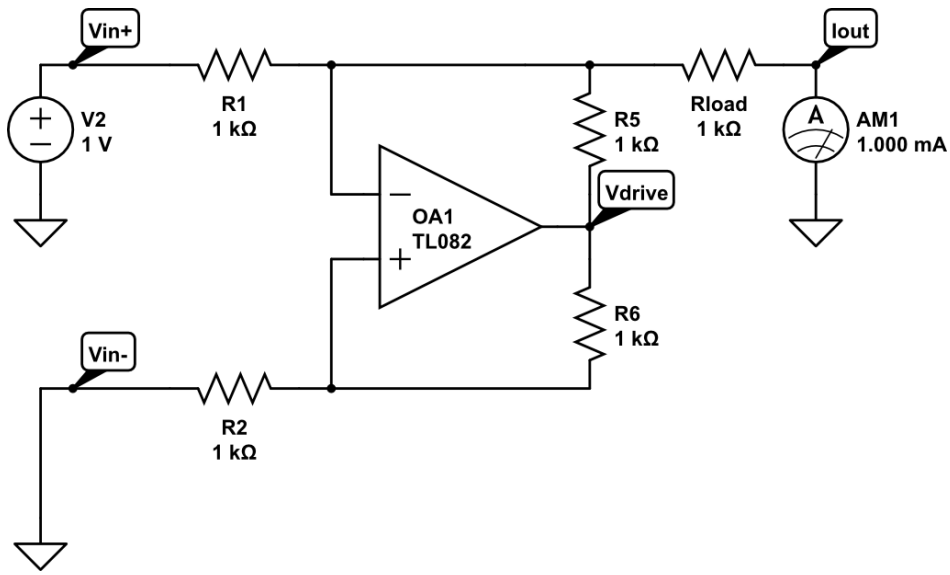

Circuit Schematic & Theory

The Howland Current Pump is a voltage-controlled current source. To ensure the output current is independent of the load resistance (R_{load}), the resistor network must be balanced.

Using nodal analysis:

$$\frac{V_-}{1\text{k}\Omega} + \frac{V_- - V_o}{1\text{k}\Omega} = 0 \Longrightarrow 2V_- = V_o$$

$$\frac{V_+ - 1}{1\text{k}\Omega} + \frac{V_+ - 2V_+}{1\text{k}\Omega} + \frac{V_+}{1\text{k}\Omega} = 0$$

$$V_+ - 0.1 + V_+ - 2V_+ + V_+ = 0$$

$$V_+ = 1\text{V}$$

$$I_L = \frac{1\text{V}}{1\text{k}\Omega} = 1\text{ mA}$$